Kolovratská 1445
251 01 Říčany u Prahy
Czech Republic

Tel.: +420 777 783 461
Fax : +420 323 604 853
E-mail : tesla@electron-tubes.cz
www.electron-tubes.cz

RD 20 ZA

The RD 20 ZA is a water cooled glass/metal power triode with an integral water jacket for frequences up to 30 MHz. The RD 20 ZA is primarily intended for use in industrial generators.
The maximum anode dissipation rating is 20 kW.

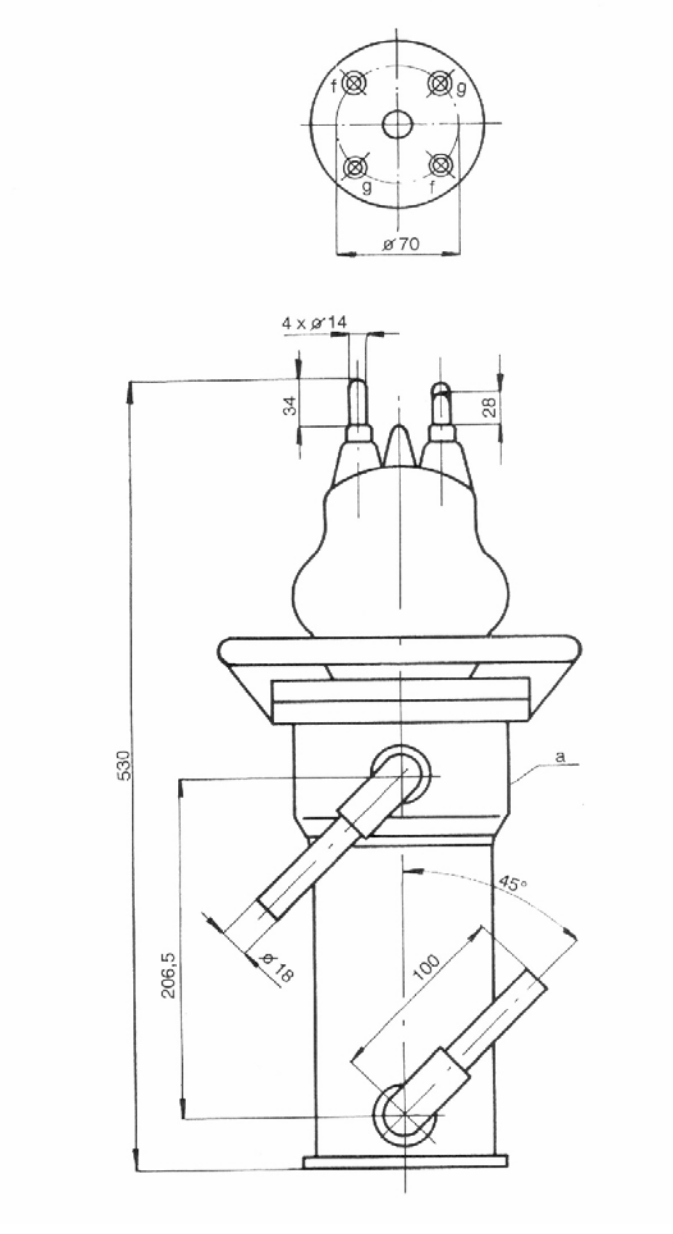

RD 20 ZA

HEATING DATA

Filament voltage ……	V_f 1)	12,5	V
Filament current …….....	I_f	110	A
Cathode ……..		thoriated tungsten, direkt heating	

1) Filament voltage for the guarannteed emission is marked on the bulb.

For allowed tolerances and other limitations see the General part of the catalogue.

MAXIMUM RATINGS

Anode voltage .....…….….	V_a	15	kV
Anode mean current …….….	I_a	5	A
Grid mean current …….….	I_g	1	A
Anode dissipation …….….	W_a	20	kW
Control grid dissipation ……..	W_{g1}	2,5	kW
Operatin frequency …….….	f	30	MHz

GENERAL DATA

Electrical

Interelectrode capacitances				
	C_{kg}		170	pF
	C_{ag}		65	pF
	C_{ak}		2,5	pF
Transconductance (at V_a = 10 kV, I_a = 1,5 A)	S		15	mA/V
Amplification factor (at V_a = 7 to 10 kV, I_a = 1 A)	μ		30	
Emission current (at $V_a = V_{g1} = V_{g2}$ = 350 V)	I_e	min.	45	A

Mechanical

Mounting positron	vertical (anode down)		
Weight	approx.	12	kg

Cooling - water

Anode ……..	water flow (input temperature 20 °C)	13	l/min.
Electrode terminals ……	low velocity air flow		
Maximum temperature of electrode terminals ……		180	°C
of glass bulb ……..		160	°C
of water at the outlet ……		65	°C

For other limitation see the General part.
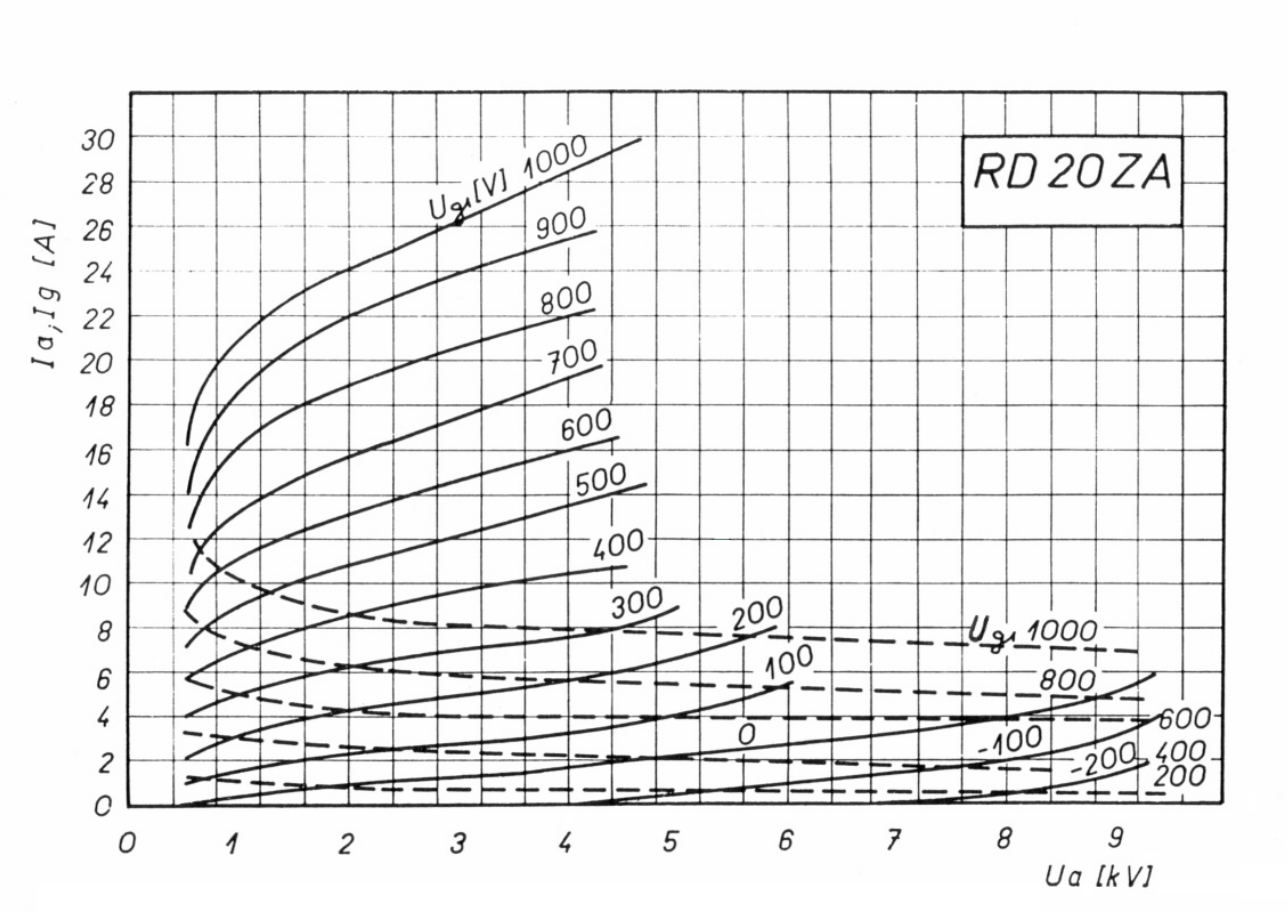
CONSTANT GRID VOLTAGE CHARACTERISTICS